Rocks, Rocks, Rocks

Overview

Groups of students will create models of rocks in order to help them better understand the formation of sedimentary, metamorphic and igneous rocks. Using the shavings of crayons (or gratings of chocolate) of different colors, students will develop models that simulate the formation of the three types of rocks. Students first create sedimentary rocks by layering the crayon shavings and then compressing them into "rocks." Students examine the resulting "rocks" and then use them to simulate the formation of metamorphic rocks by applying pressure. Then, using hot plates and ice, groups will explore the impact heating and cooling have on the formation of igneous rock. The unit concludes with students creating graphic presentations to demonstrate what they have learned and comparing their graphics to a published rock cycle diagram.

The Rocks, Rocks, Rocks activity is divided into four parts:

Part 1 - *Weathering and Sedimentary Rock Simulation* during which students create "sediment" and model the processes of deposition and sedimentary rock formation.

Part 2 - *Metamorphic Rock Simulation* during which students simulate the creation of metamorphic rocks

Part 3 - *Igneous Rock Simulation* during which students simulate the formation of igneous rocks

Part 4 - *Overview of the Rock Cycle* during which students connect the understandings from the models to the rock cycle process as it occurs in nature.

Throughout these linked activities, students are asked to discuss and record their observations, predictions and questions about the formation of rocks. These understandings and questions are regularly explored in their groups as well as shared with the whole class. Students are also encouraged to seek answers to their questions through researching in texts, by going on the Internet or through real and virtual museum visits.

Suggested Use

Designed to provide students with a review of the rock cycle, this unit can also be used as an introduction for students with little or no prior knowledge about the formation of rocks. For all students, allowing time for group and class discussion, questioning and inquiry is vital. As questions emerge, students should be encouraged to do independent research using a variety of sources including texts and the Internet. Throughout the process, students' questions and understandings should be shared and linked to help deepen the group's knowledge. One way in which to do this is by maintaining a *KWL* chart to keep track of what students *Know, Wonder, and Learn*.

Know	Wonder	Learn

You may wish to administer the New York State Intermediate Level Science Examination (ILSE) Test Sample to determine your students' needs. The understandings this activity presents are correlated with The State Education Department ILSE Test Sampler Item #12.

Approximate Time

The suggested breakdown is:

Lesson 1 - Weathering and Sedimentary Rock Simulation *(Handouts 1, 2 & 3)*

Lesson 2 - Metamorphic Rock Simulation *(Handout 4 & 5)*. Begin Igneous Rocks Simulation *(Handout 6)*.

Lesson 3 - Igneous Rock Simulation *(Handout 7 & 8)*; Rock Cycle Overview *(Handouts 9 & 10)*

You will probably wish to allocate at *least* 60 minutes for each of the three lessons. However, you may require additional time depending on the amount of time required for background explorations, the students' experience with small group learning, the materials available, possible trips and the students' needs and interests. Additionally, if you meet with your students for longer than 60 minutes, you may want to consider continuing on to the following lessons rather than stopping as suggested.

Rocks, Rocks, Rocks

Content Background

Students need to understand that rocks and rock formations occur as a result of natural processes and that the rock cycle is a process involving the formation, alteration, destruction, and reformation of rocks. This cycle occurs at or near the Earth's surface, although it may be hidden by buildings, roads, soil, or water.

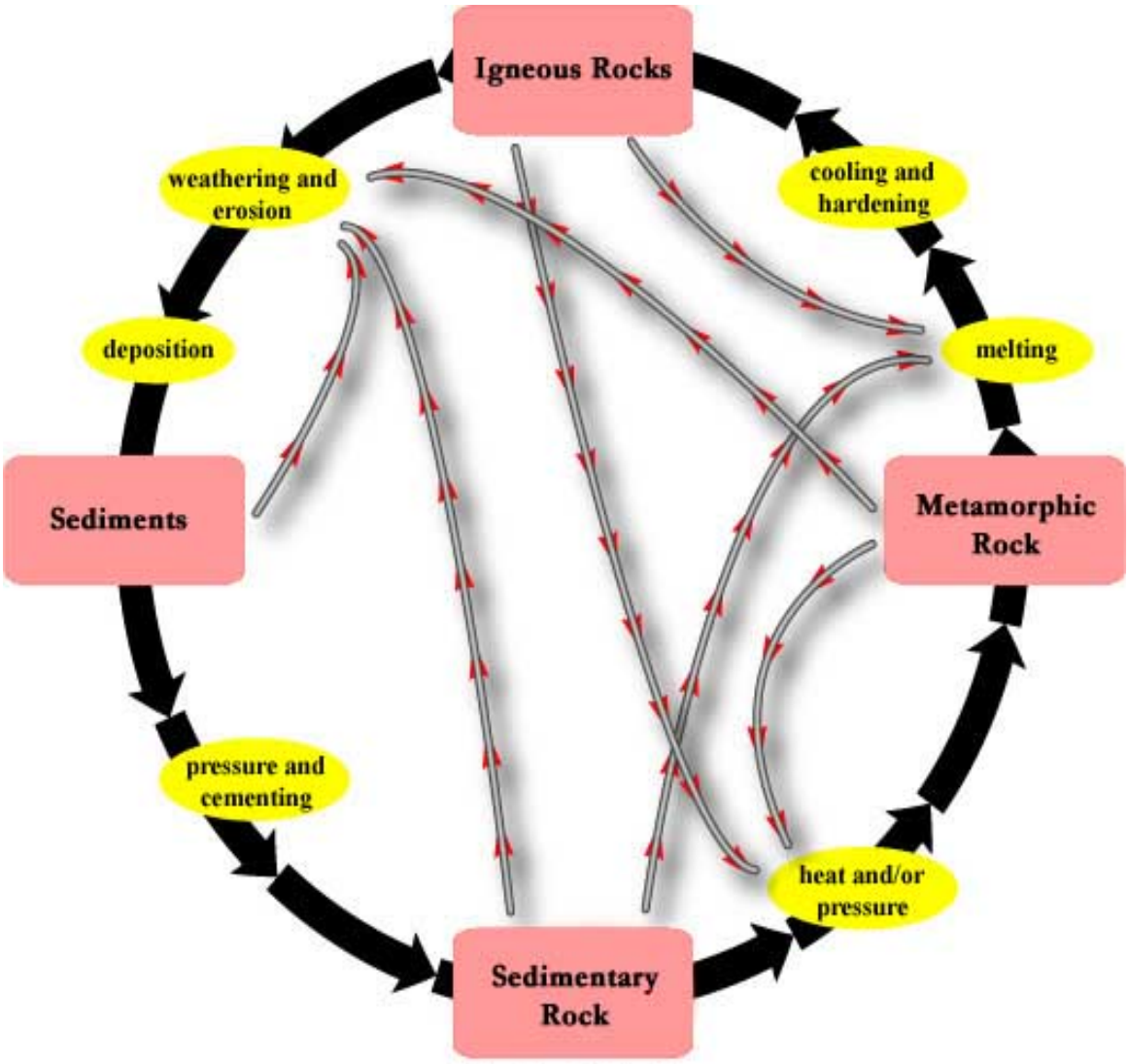

The Rock Cycle

Weathering is one of the processes that wears away the Earth's surface. This natural process breaks down rocks to form sediment and, although it is most easily observed with rocks found at or near the Earth's surface, it occurs at any depth that air or water can reach.

There are two main types of weathering processes: mechanical weathering and chemical weathering. In mechanical weathering, a rock is fragmented without changing its mineral composition as, for example, with waves or wind. In chemical weathering, a rock is broken down by chemical reactions that change its mineral composition and physical and chemical properties. Oxidation is an example of chemical weathering. When an iron-containing mineral is wet, oxygen can combine with the iron to form iron oxide or rust. Oxidation breaks down the chemical bonds between iron and other components in the rock, thus weakening the rock.

Mechanical and chemical weathering can operate together to break down rocks. For example, when mechanical weathering

breaks a rock into smaller pieces, the surface area exposed to chemical attack is increased, and thus the process of chemical weathering is speeded up. Chemical weathering can also increase the process of mechanical weathering when, for example, decay weakens the rock, making it more susceptible to breakage.

Whereas weathering produces loose, fragmented material, erosion is the movement of that weathered material. Through the process of weathering and erosion, fragmented material is transported by water, wind, ice or gravity, and then accumulates in layers of loose, unconsolidated form (such as sand or mud). These layers are called sediment and the process of laying down fragmented material that creates sediment is called deposition. The arrangement of these layers of sediment is called stratification.

The loose layers of sediment have spaces between them. The process of creating sedimentary rock from these layers involves compressing or filling those spaces. This consolidation occurs as a result of compaction and cementation. Compaction reduces the number and size of air spaces between sediment particles. This compression is caused by the increasing weight of overlying material that is continually being deposited or from pressures produced by Earth movements. Cementation, the other process that creates rocks, involves chemical reactions rather than compression. Cementation, the chemical precipitation of mineral matter that was once dissolved in water, occurs when mineral material such as carbonates, silica, and iron oxides chemically precipitate in the spaces between the compacted particles and help to bind the grains together. Minerals that act as such a natural "glue" are called cementing agents. Calcite ($CaCO_3$), quartz (SiO_2), and hematite (Fe_2O_3) are common cementing agents. Sandstone and shale are examples of sedimentary rocks.

Metamorphic rocks are formed from sedimentary or igneous rocks that have metamorphosed or changed. Heat, pressure, chemical activity, or a combination of the three act upon pre-existing rocks to harden their minerals and change them into a metamorphic rock. For example, limestone, a sedimentary rock, is transformed through heat, pressure and time into marble, a metamorphic rock. In response to pressures caused by overlying rock load and Earth movements, the original rock may become contorted in appearance and actually flow as a plastic material but the material doesn't completely melt and become liquid.

When melting is involved, the result is an igneous rock. As the melted rock, or magma, cools and solidifies below the Earth's surface, igneous rocks are formed. This cooling can occur slowly below the Earth's surface or more quickly above the surface as with volcanic activity. When igneous rocks are formed beneath the Earth's surface, the slow cooling allows time for mineral crystals to grow to a large size. In contrast, magma on the Earth's surface cools rapidly, which may prevent large crystals from forming.

Vocabulary		
weathering	mechanical weathering	chemical weathering
erosion	sediment	stratification
deposition	metamorphic rocks	cementation
compaction	igneous rocks	magma

Rocks, Rocks, Rocks

New York State Core Curriculum Major Understandings for Science

This activity supports the following New York State Core Curriculum Major Understandings for Science, Grades 5 to 8:

2.1g The dynamic processes that wear away Earth's surface include weathering and erosion.

2.1h The process of weathering breaks down rocks to form sediment….

2.2g Rocks are classified according to their method of formation. The three classes of rocks are sedimentary, metamorphic, and igneous. Most rocks show characteristics that gives clues to their formation conditions.

2.2h The rock cycle model shows how types of rock or rock material may be transformed from one type of rock to another.

(These understandings are correlated with The State Education Department ILSE Test Sampler Item #12.)

Rocks, Rocks, Rocks

New York City edition of the *New Standards*™ Performance Standards for Middle School Science

This activity supports the following New York City Performance Standards for Middle School Science:

> The student demonstrates conceptual understanding of (S3a) structure of the Earth system, such as rock cycles; and (S3b) of Earth processes including erosion by using these concepts accurately to explain observations and make predictions and by representing the concept in multiple ways (through words, diagrams, graphs or charts, as appropriate.)

This activity can be adapted to address standards listed in the **New York City edition of the New Standards Performance Standards for High School Science and the New York State Curriculum for the Physical Setting**.

Rocks, Rocks, Rocks

Materials

For the overall activity you will need the following:

- ☐Hand lenses for each student
- ☐Copies of *Handouts 1-10*for each student
- ☐Rock samples including conglomerate and other sedimentary rocks, metamorphic rocks, and igneous rocks
- ☐Newspaper to cover work areas
- ☐Published scientific sketches (optional)
- ☐Collection of rocks found at the shore, in woods, in backyards, etc. (optional)

Additionally, for the four parts of the activity you will need the following:

For Part 1: Weathering and Sedimentary Rock Simulation

For each group of four students you will need the following:

- ☐Sixteen crayons, four of four different colors such as blue, yellow, red and green
- ☐Two pencil sharpeners
- ☐Four sheets of clean paper to hold the shavings
- ☐One 45 cm x 45 cm square of heavy duty aluminum foil

For Part 2: Metamorphic Simulation

For each group of four you will need:

- ☐ Two 8" x 8" x 2" blocks of wood
- ☐ Metamorphic rock samples
- ☐ Container to preserve model rocks
- ☐ Aluminum pie trays (10 cm in diameter)

For Part 3: Igneous Rock Simulation

For each group of four you will need:

- ☐Two 8"x 8"x 2"blocks of wood
- ☐Safety goggles
- ☐Hot plate (to be shared by two groups)
- ☐Two pairs of tongs
- ☐Hot mitts
- ☐Basin with crushed ice
- ☐Squares of aluminum foil
- ☐Several folded sheets of newspaper (to use for cooling purposes)
- ☐One basin of ice water per two groups
- ☐Heavy-duty extension cords (if necessary)

For Part 4: Overview of Rock Cycle

For each group of gour you will need:

- ☐Samples of sedimentary, metamorphic and igneous rocks
- ☐Large blank paper for groups' diagrams

Note: Rather than purchase new crayons, you may wish to collect used crayons. Elementary school teachers often have collections of broken crayons. Perhaps an art teacher in your school can help you. Your students may have crayons that they can contribute as well.

Or, instead of crayons, you may use different colors of chocolate (available at party stores). If you do, use graters instead of sharpeners.

Rocks, Rocks, Rocks

Getting Ready

Caution: Special concern for safety is essential during the final part of the investigation when hot plates are used. Students must wear safety goggles throughout this part and should be especially careful when working with the hot plate and melted wax. Some hot plates may get hot enough to cause burns without showing any signs of being hot.

Optional: Collect a variety of rocks from the beach, woods or a backyard. Encourage students to bring rocks from home to add to this collection.

1. Obtain rock samples that include sedimentary, metamorphic or igneous rocks. Identify each rock for yourself. Make a key if necessary.
2. You may wish to make model rocks on your own beforehand in order to better anticipate student questions or problems.
3. Divide materials for each group and place in a container or tray.
4. Photocopy student handouts.
5. Check for electrical outlets in the classroom. Heavy-duty extension cords may be necessary for the hot plates for final activities.
6. Obtain ice for final activities and keep it frozen until it is used.

Note: Handouts are provided to give students directions as well as a place to record responses, questions and results. In order to encourage students to write more in-depth responses, you may wish to provide journals.

Rocks, Rocks, Rocks

Lesson Procedure

Part 1 | Part 2 | Part 3 | Part 4

Part 1: Weathering and Sedimentary Rock Simulation	Handout 1 | 2

Materials:

For introductory discussion

- ☐Conglomerate rock samples
- ☐One hand lens for each student
- ☐Published scientific sketches (optional)
- ☐*Handout 1*

For Weathering Simulation

- ☐Newspaper to cover work areas
- ☐One 45 cm x 45 cm square of heavy duty aluminum foil for each group
- ☐A pencil sharpener and four crayons of the same color for each student (each group member must have a different color)
- ☐Sheets of clean paper to hold the shavings for each student
- ☐Copies of *Handout 2*for each student

For Sedimentary Rock Simulation

- ☐Two wooden blocks for each group
- ☐One container to preserve model rocks for each group
- ☐Copies of *Handout 3*for each student

1. Divide students into groups of four. Distribute samples of conglomerate rocks to each group. Ask students to use hand lenses to take a close-up look at the conglomerate rock in order to come up with possible answers to this question: *How do you think that this rock was formed?* Allow students five to ten minutes to discuss their ideas. Circulate and help stimulate student thinking by asking questions such as: *"What do you think these bits are? Where might this [pebble] have come from? How might these pieces have come together? How long do you think it might have taken for all of these pieces to form into a rock?"* Some possible ideas might include: Rocks get broken apart by running water and then get "glued" back together by mud; sand and pebbles get pressed together as they pile up; melted rocks come out of volcanoes and harden.

2. Distribute *Handout 1* and have students sketch the conglomerate rock and list their ideas about how it was formed. Before students begin drawing you may wish to display a variety of scientific drawings. Have students identify the elements of an effective diagram. Some features that they might mention include: labels, close-up details or magnified insets, captions or titles.

3. Bring the small groups together for a class discussion. On chart paper, list their ideas about how the rock that they looked out might have formed. You may want to use a KWL chart to group what they **K**now, **W**onder and **L**earn.

Know	Wonder	Learn

4. Explain to students that they are going to check their ideas by making a model of a rock.

5. Give students a brief overview of the steps they will take to create crayon shavings. Emphasize the importance of keeping the colors separate at this stage. Distribute *Handout 2*, sheets of newspaper, crayons, sharpeners and sheets of paper and aluminum foil to each group. Remind them to follow the directions on the handout. Circulate as the groups work to assess progress and provide support. Encourage students' speculations about how the pencil shavings replicate what happens to rock material in nature.

6. When students have finished making their shavings, bring them together as a whole group. Model the steps they will follow to combine the shavings and, referring to the diagram on the handout, demonstrate how to fold the foil over the fragments. Remind students to be sure they allow about one cm between the fragments and each of the four foil folds.

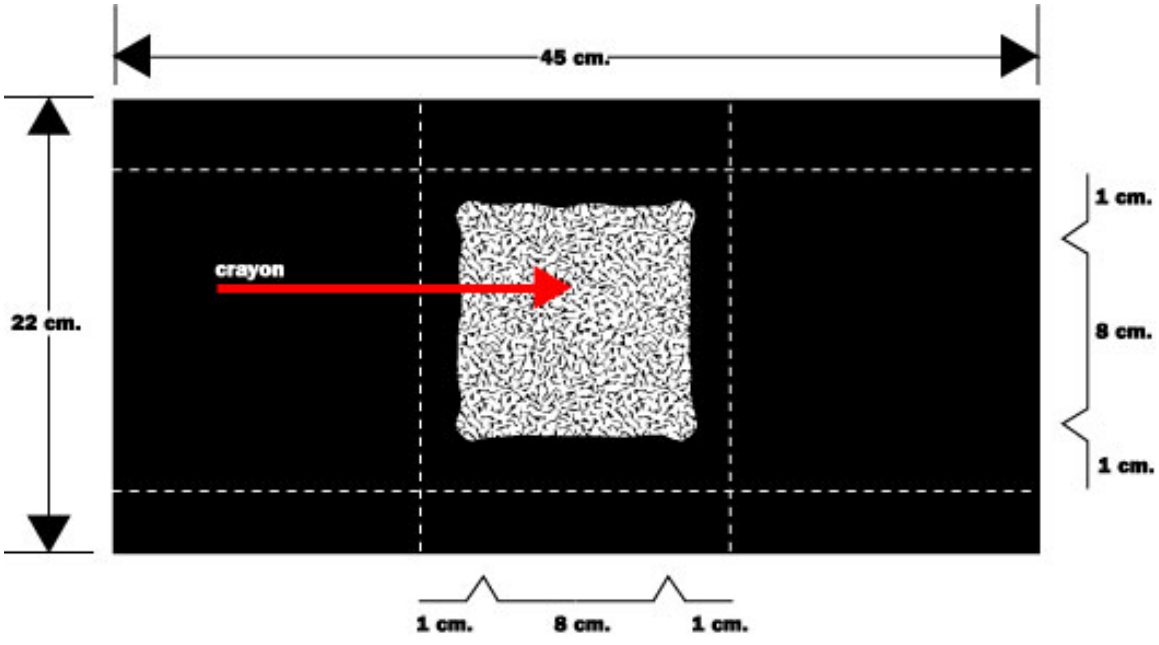

Aluminum foil with different colored "rock" fragments in the center. Dotted lines are fold lines.

7. Have students return to their group areas and begin work.

8. Distribute the wooden blocks when students have finished layering their shavings and folded them into the aluminum foil package. Have students follow the directions on the handout and press the package of shavings.

9. As students complete the handout, circulate to assess and deepen students' understanding by asking questions about the connection between what they are doing and the formation of the conglomerate rock. *For example, You are grating the crayon into small pieces. Did you notice small pieces in the conglomerate rock? How do you think they were formed?*

10. As a whole group, discuss what students observed. Add any new ideas or questions to the KWL chart.

11. Distribute containers to preserve model rocks. Have students place in the container one piece of their "rock" and any of the loose "rock" fragments that are left. Have them put their group names on the container and return the other piece of "rock" to the foil package and then wrap the package in the foil as before. Have them place the package in an envelope with the group's name on the envelope and clean their work areas.

12. Distribute *Sedimentary Rock Information - Handout 3*. As a class, read the handout and discuss and answer the questions.

> **Note:** This could be a good stopping point. If you have extra time, you may wish to have students read further about sedimentary rocks.

Part 2: Metamorphic Rock Simulation	Handout 4 | 5

Materials:
For Metamorphic Rocks

- ☐Foil wrapped packages (from previous lesson)
- ☐Copies of *Handouts* 4 and 5
- ☐Two wooden blocks for each group
- ☐Container to preserve "rocks"(from previous lesson)
- ☐Aluminum foil tray
- ☐Newspaper to cover work area

For group discussion

- ☐Sedimentary and metamorphic rock samples
- ☐One hand lens for each student

Students should work in the same groups as in Part 1.

1. Have each group collect their aluminum package of "rocks" and two wooden blocks and spread newspaper to protect their workplaces. Explain to students that they will need to apply greater pressure in this part of the activity than previously. To do this, they will need to put the foil package between the wooden blocks, then put a chair leg on top of the blocks and have one member of the group sit on the chair.

2. Distribute *Handout 4* and have students begin the activity by putting the foil package between the wooden blocks and applying the necessary pressure by using a chair leg. You can circulate to listen to and extend their thinking.

3. When students have completed *Handout 4*, bring them together as a whole group and share observations and findings. As a class, brainstorm how in nature, pressure might occur that would change rocks. Add students' questions and ideas to the KWL chart.

4. Tell students the rocks they've just made are models of metamorphic rocks. Distribute *Metamorphic Rocks Information - Handout 5*. As a class, read the handout and discuss and answer the questions.

5. Distribute to each group the containers holding pieces from their first "rock." Have students save one piece of the rock they've just made in this container (as in previous lesson) and put all remaining fragments or rocks into an aluminum foil tray to use in the next lesson. Have them label the tray with their group's names.

6. Distribute hand lenses and samples of metamorphic and sedimentary rocks to each group. Encourage students to look closely at these rocks as well as to observe their texture, weight, hardness and any other qualities they notice. Ask students to observe the differences between the two types of rocks. As a whole group share observations about the differences between sedimentary and metamorphic rocks.

7. Go on to begin Part 3 (igneous rocks) as the melted crayons will need to cool.

Part 3: Igneous Rock Simulation	Handout 6 | 7 | 8

Caution: Special concern for safety is essential during the final part of the investigation when hot plates are used. Students must wear safety goggles throughout this part and should be especially careful when working with the hot plate and melted wax. Some hot plates may get hot enough to cause burns without showing any signs of being hot.

Materials:

For Igneous Rock Simulation

- ☐Newspaper to cover work areas as well as several folded sheets to use for cooling purposes.
- ☐Squares of aluminum foil
- ☐Aluminum foil tray with leftover "rock"samples (from previous)
- ☐One hotplate to be shared by two groups
- ☐Two pairs of tongs per two groups
- ☐One basin of crushed ice per two groups
- ☐Safety goggles
- ☐Oven mitts
- ☐Copies of *Handouts 6*, *7* and *8*

Students should to work in the same groups as in Parts 1 and 2. For this activity, two groups will share the same hot plate.

1. Have students return to groups from previous lesson.

2. Pass out squares of aluminum foil and have groups cover the hot plate surface with the square to protect the hot plate. As in all the activities, they should also cover their group work area with newspaper.

3. Pass out *Handout 6* and read over the directions with the students emphasizing the need to be careful with the hot plate. Remind students to avoid dropping wax fragments on the hot plate surface and not to let the wax heat to the spattering point. Tell them to watch the melting carefully and to turn the hot plate off when most of the "rock" has melted. There should be enough heat in the hot plate and in the molten wax to melt the remaining solid mass.

4. Have groups collect the aluminum trays holding the fragments and leftover rocks. Since two groups are sharing one hot plate, determine which group will go first. Have that group place their tray on the hot plate, and turn the temperature to medium. The second group can watch the first group.

5. As the first groups are finishing, set out several thicknesses of newspaper and have them use two pairs of tongs to remove the aluminum trays from the hot plate and place the trays on the newspaper to cool (approximately half an hour).

6. As the second groups finish, set out the basins with crushed ice. Have them use two pairs of tongs, remove the aluminum trays from the hot plate and place them on the ice to cool for about 30 minutes

Note: You can use the time waiting for the igneous "rocks" to cool to let students research the questions they've generated in relation to rocks. They can find answers in textbooks, other readings you've gathered as well as the websites suggested in Technology Connections.

After the "rocks" have cooled and hardened…

1. Have groups collect their trays with the cooled "rock" and return to their work areas. As before, they should cover their group work area with newspaper.

2. Distribute *Handout 7* and have students follow the directions to begin the activity

3. When students have completed steps 1-4 of the handout, bring them together as a whole group to share the "rocks" they chose as interesting. Compare the "rocks" cooled under different conditions (ice vs. newspaper) and have students discuss/brainstorm reasons for the differences.

4. Review the procedure for working with hot plates with students and read over directions and model as necessary the procedure of using tongs to pour melted wax into ice water. **Remind students to avoid dropping wax fragments on the hot plate surface and not to let the wax heat to the spattering point. Tell them to watch the melting carefully and to turn the hot plate off when most of the 'rock' has melted.** There should be enough heat in the hot plate and in the molten wax to melt the remaining solid mass.

5. If necessary, pass out squares of aluminum foil and have groups re-cover the hot plate surface with the foil.

6. Have students complete *Handout 7*. As before, two groups will be sharing one hot plate. Determine which group will go first and have that group place their tray on the hot plate, and turn the temperature to medium (the second group can observe the first group).

7. Set out the basins of ice water (one for two groups)

8. When all groups have completed the process, bring class together to share and discuss students' observations. Ask students how the melting process might occur in nature.

9. Distribute *Igneous Rocks Information - Handout 8*. As a class, read the handout and discuss and answer the questions.

Part 4: Overview of the Rock Cycle	Handout 9 | 10

Materials:

- Copies of *Handouts 9* and *10*
- Samples of sedimentary, metamorphic and igneous rocks
- Saved samples of model sedimentary, metamorphic and igneous "rocks"
- Large blank paper for groups' rock cycle diagrams

1. As a whole group, go over all the steps of the rock model just completed (sharpening crayons, layering them, wrapping them in aluminum foil, applying light pressure (to create sedimentary rocks); applying heavy pressure (to create metamorphic rocks); adding heat and using different methods to cool the rocks (igneous rocks). Encourage students to link these steps to what they've read about in relation to the processes that create sedimentary, metamorphic and igneous rocks in nature.

2. Have students return to groups and pass out *Rock Model Overview - Handout 9*. Distribute blank sheets of paper big enough for students to create final versions of their diagrams.

3. As students discuss and draft their diagrams, you can circulate to listen to and extend their discussions. Give students time to do a thoughtful and thorough job and encourage them to revisit their models or rethink their understandings.

4. When students have finished, have groups present their finalized diagrams. Post on wall and have groups look at those of

other groups and compare and note differences.

5. Distribute *Rock Cycle Diagram - Handout 10*. As a whole group, interpret the diagram and then compare to the student versions.

6. Distribute sedimentary, metamorphic and igneous rock samples. Ask students to work in partners or groups to categorize the rocks as igneous, metamorphic or sediment and to give reasons for their decisions. Encourage them to compare the real samples to the model rocks they created and to use the information from the reading in their reasoning. After they've had time to work and categorize, have students share their reasoning with the class.

7. This is a good point to review the KWL chart as a whole group. Look at the "W" column and see what you've answered so far. Encourage your students to read a piece from science textbooks as well as to volunteer to do independent research on questions that haven't been answered. This is a good point for students to explore web sites that can extend their understandings and questions. (See Technology Connections for suggested sites.)

Rocks, Rocks, Rocks

Conglomerate Rocks - Handout 1

Name_____ Date _____

Use the hand lens and look closely at the conglomerate rock. Discuss in your group what you notice about this rock and your ideas of how it might have formed. Then make a sketch of the rock below. A good scientific sketch includes the date, labels, close-up details, measurements and so on.

Write your ideas of how this rock was formed:

_____
_____
_____
_____
_____
_____
_____
_____

Rocks, Rocks, Rocks

Making a Rock Model - Handout 2

Name_____ Date _____

Scientists use models to help them better understand things that they can't observe for themselves. You can't observe a rock being formed in nature, but you can make a model to help you understand how rocks are formed.

1. Cover your group work area with newspaper.

2. You are going to try to make a pile of shavings that you will use to create your own rock. Using the pencil sharpener, sharpen your crayon and collect the shavings on a clean piece of paper. Be careful not to mix the colors!

3. When you finish your shavings, fold them into a clean piece of paper so they don't mix.

4. Fold one sheet of aluminum foil in half and place it on the work area.
   - One color at a time, take turns placing the shavings in the center of the foil.
   - Continue until each person in the group has placed his or her shavings on the pile.
5. Follow the diagram below to fold your shavings into a package. Label the package with your group's names.

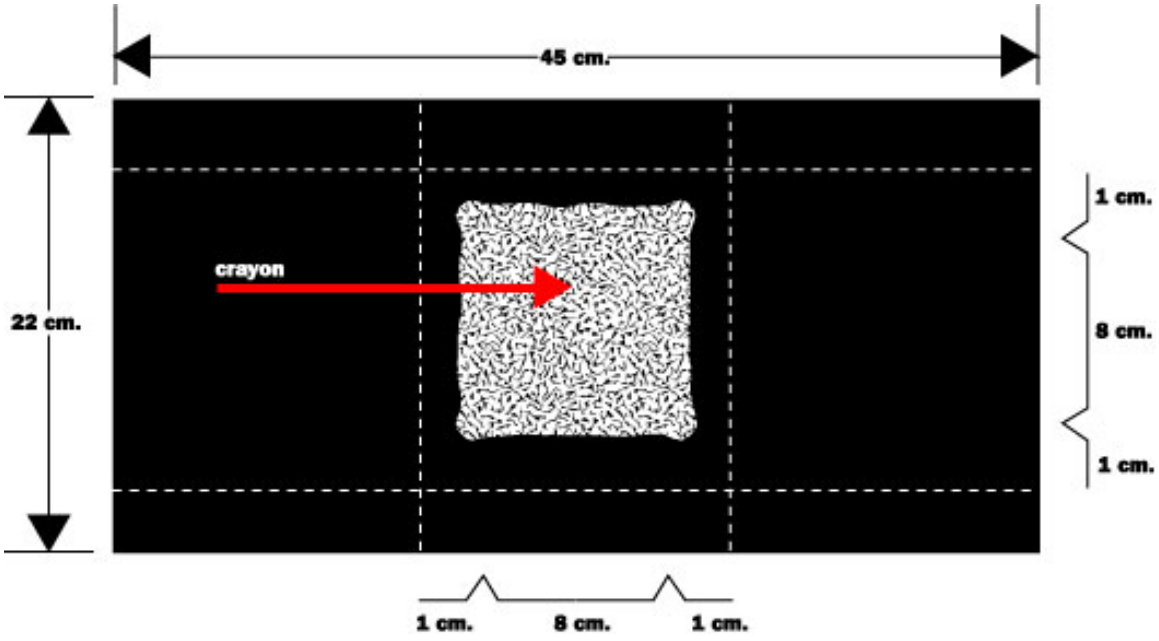

Aluminum foil with different colored "rock" fragments in the center. Dotted lines are fold lines.

6. Place folded foil package between two wooden blocks. Press lightly on top of this "sandwich."

   Before you open the package, make some predictions of what the crayon shavings will look like as a result of this pressure. Discuss your predictions in your group and then write what you think you'll see.

7. Open the foil and examine what's inside.

Discuss and write about what you see.

_____
_____
_____
_____

8. Break the "rock" you've made into half. Use the hand lens to look at the inside closely.

   Discuss and write your observations.

_____
_____
_____
_____
_____
_____

Discuss and write: Think of the real rock that you looked at earlier and your ideas of how it was formed. How do you think the pencil shavings you've made are similar to what happens when rocks are created naturally?

_____
_____
_____
_____
_____
_____
_____
_____
_____
_____

After making this rock model, what new questions or ideas do you have about how rocks are formed?

_____
_____
_____
_____
_____
_____
_____
_____
_____
_____
_____

Rocks, Rocks, Rocks

Sedimentary Rock Information - Handout 3

Name_____ Date _____

Vocabulary		
weathering	mechanical weathering	chemical weathering
erosion	sediment	stratification
deposition		

Weathering is the breaking down of rocks into small pieces. Some forces that break down the rocks are moving forces like wind and waves. When moving forces break down rocks, it is called **mechanical weathering**. Chemical reactions can also weather rocks. Some rocks rust; others may dissolve in acid rain. Chemical interactions that break down rocks are **chemical weathering**.

When you made your rock, the pencil sharpener stood for the forces that weather rocks. The crayon stood for the rocks being weathered.

Erosion is the name of the processes that move the fragments produced by weathering. Water, wind, ice or gravity move those fragments which then gather or accumulate in loose layers called **sediment**. Sand and mud are examples of sediment. **Deposition** is the name of the process that creates the layers of sediment. The arrangement of these layers of sediment is called stratification.

Think about the steps involved in creating your model rock. Which step or steps imitated the creation of sediment?

_____
_____
_____
_____
_____
_____
_____

What did you do that represented deposition and stratification?

_____
_____
_____
_____
_____
_____
_____

Sediment layers become rocks when the spaces between the layers are either compressed or filled. This requires compaction or cementation.

- **Compaction** reduces the number and size of air spaces between sediment particles. This compression is caused by the increasing weight of overlying material that is continually being deposited or from pressures produced by Earth movements.

- **Cementation**, the other process that creates sedimentary rocks, is a lot like the process of gluing. Cementation occurs when minerals dissolve in water and act like a natural glue to bind the grains together.

What represents compaction or cementation in the model you made?

_____
_____
_____
_____

What was different about the model you made and what actually occurs in nature when sedimentary rocks are formed?

_____
_____
_____
_____
_____

Rocks, Rocks, Rocks

Making Another Rock Model - Handout 4

Name_____ Date _____

1. Cover your group work area with newspaper.

2. Place your group's folded foil package between two wooden blocks and place on the floor. Take a chair and put one of its legs on top of the blocks. Have one student sit on this chair so that there is greater pressure on your "rock" fragments than in the earlier activity.

3. Remove the package.

   Before you open the package, predict what the strong pressure will have done to your "rock."
   _____
   _____
   _____
   _____
   _____
   _____
   _____
   _____

4. Open the package and observe the new "rock." Then, carefully break this "rock" into two parts and examine the broken edges. Draw what you observe.

5. Share your drawings with your group and discuss what you saw. Then, look at the parts of your "rock" that came in contact with the aluminum foil. Compare the surface of this "rock" to the first rock you made. How are they different and how similar? Record your observations.

   How do you think the processes used to make the model of this rock could occur in nature?
   _____
   _____

_____
_____
_____
_____
_____
_____

After making this rock, what new questions or ideas do you have about how rocks are formed?

_____
_____
_____
_____
_____
_____
_____
_____

6. Place one piece of this "rock" into the container your teacher gives you. Put all remaining fragments or rocks into an aluminum foil tray (you'll use these next).

Rocks, Rocks, Rocks

Metamorphic Rock Information - Handout 5

Name_____ Date _____

Metamorphic comes from a word that means change. Metamorphic rocks are changed rocks.

Metamorphic rocks are formed when heat, pressure and/or chemical reactions act on rocks. For example, limestone, a sedimentary rock, is transformed with heat, pressure and time into marble, a metamorphic rock. Heat is involved in the creation of metamorphic rocks, but melting is not. Overlying rock load and Earth plate movements make so much pressure that the original rock may become twisted. Sometimes the heat and pressure can make these rocks actually flow. But they don't completely melt and become liquid.

How was the model you made like the process of forming a metamorphic rock?

_____
_____
_____
_____
_____
_____

What was different about the model you made and what actually occurs in nature when metamorphic rocks are formed?

_____
_____
_____
_____
_____
_____
_____
_____

Rocks, Rocks, Rocks

Making a Rock Model - Handout 6

Name_____ Date _____

1. Cover your group work area with newspaper and cover the hot plate surface with a square of aluminum foil.
2. Get the aluminum tray holding your leftover fragments and rocks and bring back to your group. When it's your group's turn, place the tray on the hot plate, and turn the temperature to medium.

> **Caution:** Be careful not to drop wax fragments on the hot plate surface or to let the wax heat to the spattering point. Turn the hot plate off when most of your 'rock' has melted. Remember to turn off the hot plate before all the wax is melted. Be sure not to let the wax spatter.

3. Melt the wax. Do not let the hot plate get so hot that the wax melts quickly and begins to splatter.
4. When most of the "rocks" have melted, turn the hot plate off. There should be enough heat to melt the remaining wax.
5. Using two pairs of tongs, CAREFULLY lift the tray with the molten wax off the hot plate.

> **Caution:** Special concern for safety is essential during the final part of the investigation when hot plates are used. Students must wear safety goggles throughout this part and should be especially careful when working with the hot plate and melted wax. Some hot plates may get hot enough to cause burns without showing any signs of being hot.

6. Wait until your teacher directs you where to place your "rock." Then, place your tray on several thicknesses of newspaper or on crushed ice until the following day.

In your group, discuss what happened to the "rock" fragments when they were heated on the hot plate. Where could this kind of heat and melting happen in nature?

_____
_____
_____
_____
_____
_____
_____
_____

Rocks, Rocks, Rocks

Making Rock Models - Handout 7

Name_____ Date _____

Read these steps to make the final part of the rock model.

1. Cover your group work area with newspaper. Get the tray with the "rock" you made in the last class.

2. Pick up your tray with the solidified "rock," turn it over, and gently tap the bottom so that the wax block falls out. Observe the wax surface that was next to the metal bottom and discuss with your group what you notice about that surface.

3. Compare your group's product with one cooled under different temperature conditions. If your "rock" was cooled on newspaper look at one that cooled on ice cubes and vice versa. Discuss your observations in your group.

   What do you notice about the "rock" you've made? How does your rock compare to the one that was cooled differently? Discuss the similarities and differences and talk about what you think caused the differences. Then write.

   _____
   _____
   _____
   _____
   _____
   _____
   _____
   _____
   _____
   _____
   _____
   _____
   _____
   _____

4. Break your "rock" into several pieces. Place one piece with the most interesting features in the aluminum foil tray with the other "rocks" your group has made. Put the leftover fragments back into the melting tray.

5. Cover the hot plate surface with a square of foil as you did before. Then, place the aluminum tray on the hot plate, and turn the temperature to medium. Melt the wax.

   Caution: Be careful not to drop wax fragments on the hot plate surface or to let the wax heat to the spattering point. Turn the hot plate off when most of your 'rock' has melted. Remember to turn off the hot plate before all the wax is melted. Be sure not to let the wax spatter.

6. While the wax is still melted, use two pairs of tongs to hold the tray. Have one student from your group CAREFULLY pour the melted wax into a tray of ice water. Watch as your "rock" formation solidifies in the ice water. When it's cooled and hard, use the tongs to remove the "rock."

Look closely at the "rock" your group has just made and draw what you observe.

Share your drawings in your group and discuss how this rock is different from the rock you made before. Talk about what caused the differences, then write.

_____
_____
_____
_____
_____
_____
_____
_____
_____
_____

Rocks, Rocks, Rocks

Igneous Rocks Information- Handout 8

Name_____ Date _____

Vocabulary

igneous rocks magma

Heat and melting are important in the forming of **igneous rocks**. **Igneous rocks** are formed as the melted rock, or **magma**, below the Earth's surface cools and solidifies. This cooling can occur slowly, below the Earth's surface, or more quickly above the surface. (Think about volcanoes.)

When igneous rocks are formed beneath the Earth's surface, the slow cooling allows time for mineral crystals to grow to a large size. In contrast, magma on the Earth's surface cools rapidly, which may prevent large crystals from forming.

How was the model you made like the process of forming an igneous rock?

_____
_____
_____
_____
_____
_____

What was different about the model you made and what actually occurs in nature when igneous rocks are formed?

_____
_____
_____
_____
_____
_____
_____
_____

Rocks, Rocks, Rocks

Rock Cycle Diagram - Handout 9

Name_____ Date _____

Now that you've modeled and read about the formation of the three types of rocks, you can create a diagram that explains how they are formed. Using what you have learned, discuss how you might use a graphic to show how sedimentary, metamorphic and igneous rocks are formed. Use this paper to make a rough sketch of your final diagram. Then make a final draft of your diagram to show to the rest of the class.

Note: A good diagram includes a title and labels. You may wish to use symbols to stand for things such as a triangle for heat. Then you will need a key to show the meaning of any symbols that you use.

Rocks, Rocks, Rocks

Rock Cycle Diagram - Handout 10

Rock Cycle Diagram - Handout 10

Name_____ Date _____

Read and discuss this diagram. Compare it to yours and your classmates.

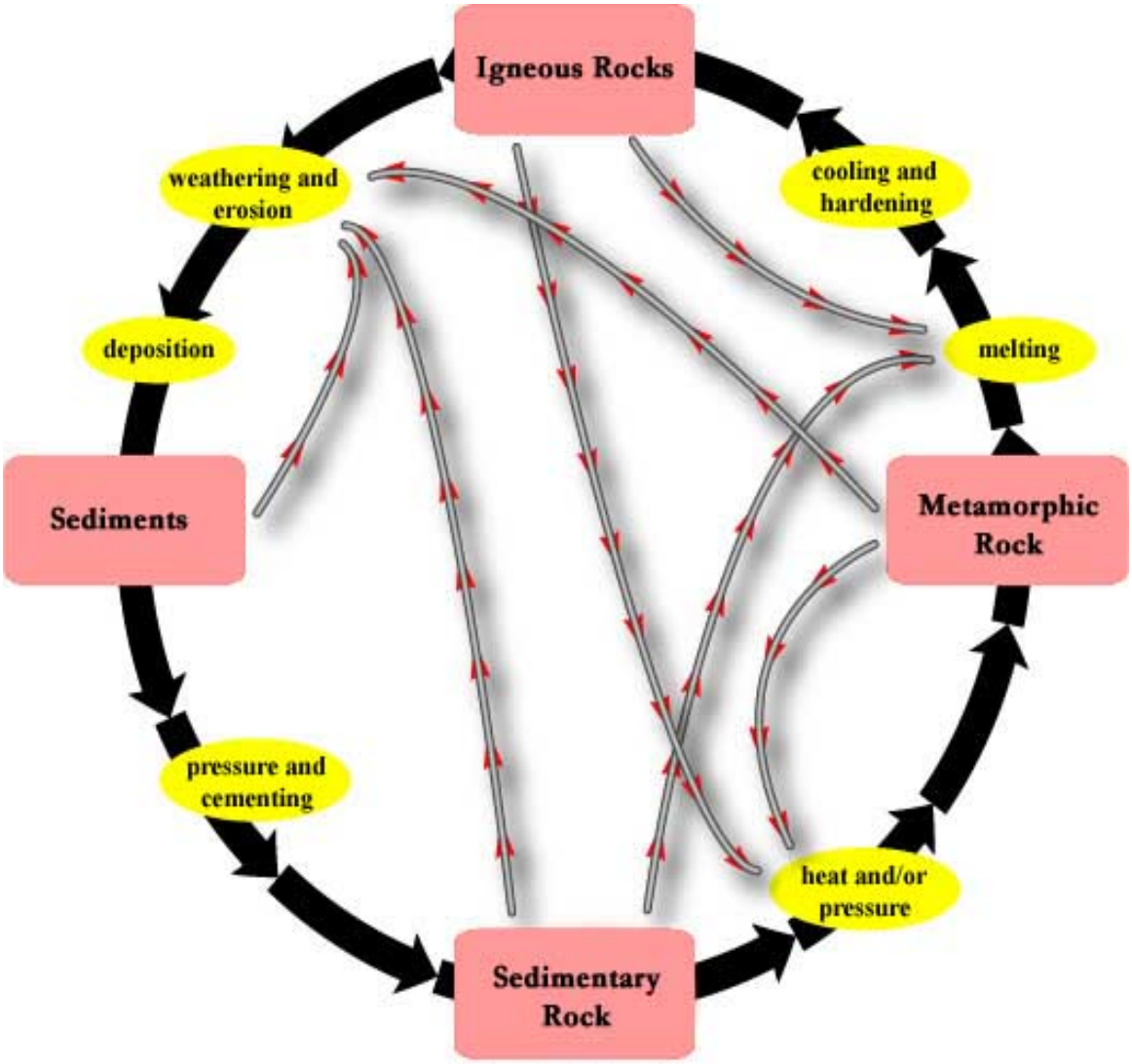

The Rock Cycle

Rocks, Rocks, Rocks

Test-Prep Connection

The purpose of *Test-Prep Connection* is to provide students with additional practice in preparation for both the manipulative and objective portions of the New York State Intermediate Level Science Examination (ILSE).

The *Manipulative Test-Prep Section* includes skill-based activities that focus on the materials, equipment and procedural skills that students need to master. This section includes teacher directions, a student worksheet and test-taking tips. All activities and lessons are aligned with the major understandings of the New York State Intermediate Level Science Core Curriculum, Grades 5-8.

The *Objective Test-Prep Section* includes student worksheets that focus on New York State Core Curriculum concepts and provide practice in interpreting diagrams and graphs. This section includes teacher directions, a student worksheet and test-taking tips. All activities and lessons are aligned with the major understandings of the New York State Intermediate Level Science Core Curriculum, Grades 5-8.

Rocks, Rocks, Rocks

Manipulative Test Prep

Overview

The *Rocks, Rocks, Rocks* activity is an investigation of the rock cycle. The *Sorting Rocks* activity provides students with further opportunities to apply their knowledge of these content areas. Before working on the *Sorting Rocks* activity, students should have already completed a study of rocks and have had a variety of experiences such as those suggested in the *Rocks, Rocks, Rocks* activity.

In *Sorting Rocks*, students will have an opportunity to extend their knowledge of rocks by using a dichotomous (i.e., two opposite choices) key to sort rocks by their properties. Students will need to know how to use a key and how to develop questions for the key in order to categorize familiar and unfamiliar rocks.

New York State Core Curriculum Major Understandings for Grades 5 to 8 supported by this activity include:

2.2g: Rocks are classified according to their method of formation. The three classes of rocks are sedimentary, igneous and metamorphic. Most rocks show characteristics that give clues to their formation conditions.

New York State Core Curriculum Process Skills Based on Standard 4 for Grades 5 to 8 supported by this activity include:

- Classify objects according to an established scheme and a student-generated scheme.
- Develop and use a dichotomous key.

Objectives

Students will:

- Sort rocks using a dichotomous key based on physical properties
- Develop questions for the key in order to further categorize the rocks
- Categorize an unknown rock based on the key

Process Skills

Organizing, observing, sorting, questioning, inferring, and explaining

Materials

- ☐ Nine rocks of types with which the students are already familiar and of the following categories: 3 sedimentary (e.g., shale, sandstone and limestone), 3 igneous (e.g., pumice, basalt and granite), 3 metamorphic rocks (e.g., marble, schist and slate)
- ☐ One less familiar rock such as obsidian (can be sedimentary, igneous or metamorphic).

For each pair of students:

- ☐ One hand lens
- ☐ Copies of *Sorting Rocks* and *Sorting Chart* worksheets

Getting Ready

1. Obtain enough samples of sedimentary, metamorphic and igneous rocks for each pair of students to work with three from each of the three categories (9 total for each set).

2. Obtain samples of an unfamiliar rock (e.g., obsidian) of any type. You'll need enough so that each pair can work with one. They do not need to be the same time.

3. Work through the sorting activity with possible rocks so that you can select those with characteristics that will best lend themselves to the dichotomous chart students will be using.

4. Organize the rocks you select so that each pair of students will have nine to work with. Label the rocks in each set *a, b, c, d, e, f, g, h,* and *i*. Label the unfamiliar rock *u*. You may want to make a teacher key as a memory aid.

5. Make copies of *Sorting Rocks* and *Sorting Chart* worksheets.

6. During the activity, be ready to provide each group with their unknown rock once they have finished the first part of the activity.

Lesson Procedure

1. Review with students a list of the physical properties of rocks and brainstorm with them properties that can be used to categorize them (e.g., color, texture and bands).

2. Test-taking strategy: Offer a time management strategy by saying:
   Some tests are timed. Before you begin a test, you should know how much time you have to complete it. Then spend a minute or two thinking about how to pace yourself in order to complete the test on time.

   Then pose this question to students: *(If you have 60 minutes to complete 30 questions, about how many questions should you finish after 20 minutes? 40 minutes?)*

3. Distribute the worksheets to the pairs of students. Stress that they should record each rock's letter on the *Sorting Rocks* worksheet.

4. Explain to students that they have 15 minutes to complete the sorting activity. Point out that there are three parts. Have them estimate what they should have completed after five, ten and fifteen minutes. Let students know when five-minute intervals have passed.

5. Have small groups of students discuss the ways in which they sorted the rocks. How many different physical properties did they sort for? As a whole group, tally the number of questions that students used.

6. After the activity is completed, discuss how accurate their time management estimates were.

Rocks, Rocks, Rocks

MANIPULATIVE TEST PREP: Sorting Rocks Worksheet

Name_____Date_____

Test-taking Strategies

Read all of the instructions for an activity once. Think about what you are supposed to do. Reread the directions. If your ideas about how to complete the activity stay the same, complete the activity. If your ideas don't match, read the directions one last time. Always double check to see if you have completed all of the items.

You have discovered a number of ways in which to describe and sort rocks based on their physical properties. With your partner discuss and write as many as you can think of:

_____
_____
_____
_____
_____

In this activity you will sort rocks based on physical properties. Work with your partner to complete your key. Then work to complete your partner's key in a different way.

You may write on this sheet. Do not write on the *Sorting Chart*.

1. Observe the nine rocks one at a time. Follow the directions to sort them. To help you, actually place them on the *Sorting Chart*.
   Question: Does it have crystals?

2. Separate the rocks into BOX 1 and BOX 2 on the sorting chart according to the answer to this question. Record the letter of each rock that you put in BOX 1 and BOX 2 below.

1 yes	2 no

3. Look carefully at each of the rocks you placed in BOX 1 and separate them into BOX 3 and BOX 4 on the *Sorting Chart* according to your answer to this question.

   Question: Are they banded?

4. Record the letter of each rock that you put in BOX 3 and BOX 4 in the space below.

3 yes	4 no

5. Look carefully at the rocks you placed in BOX 2. Create a question that would separate them into BOX 5 or BOX 6. Your question must result in at least one rock being placed in BOX 5 and at least one rock being placed in BOX 6 and must be based on the rock's observable characteristics.
   My question is:
   _____
   _____

6. Separate rocks from BOX 2 into BOX 5 or BOX 6 on the *Sorting Chart* according to the answer to your question. Record the letter of each rock that you put in BOX 5 and BOX 6 in the spaces below:

5 yes	6 no

7. Raise your hand to signal your teacher that you are ready for the rock labeled "u".

8. Look closely at the rock labeled "u". Based on the question at the top of the Sorting Chart, would you place the 'unknown rock' in BOX 1 or BOX 2?

   CHECK ONE:
   < > Box 1 < > Box 2

   Explain why:
   _____
   _____
   _____
   _____

Rocks, Rocks, Rocks

MANIPULATIVE TEST PREP: Rock Sort

ROCK SORTING CHART

Place all the rocks here. As you answer the questions, move the rocks to the correct boxes Question: Does this rock have crystals?

1 YES Question: Is it banded?	2 NO Question: (Create your own. Write it on your worksheet)

3 YES	4 NO

5 YES	6 NO

Rocks, Rocks, Rocks

Objective Test Prep - Teacher Directions

Overview

The *Rocks, Rocks, Rocks* activity is an investigation of the rock cycle. The *Rocks and Minerals Worksheet* provides students with an opportunity to assess their knowledge of minerals and rocks as well as their ability to read and interpret a diagram and a table. The worksheet that follows can be used as a mini-quiz, study guide, homework assignment, or classroom research guide. Before working on the *Rocks and Minerals Worksheet*, students should have had a variety of experiences with rocks such as those suggested in the *Rocks, Rocks, Rocks* activity.

New York State Core Curriculum Major Understandings for Grades 5 to 8 supported by this activity include:
2.1e: Rocks are composed of minerals. Only a few rock-forming minerals make up most of the rocks of Earth. Minerals are identified on the basis of physical properties such as streak, hardness, and reaction to acid.

2.2g: Rocks are classified according to their method of formation. The three classes of rocks are sedimentary, igneous, and metamorphic. Most rocks show characteristics that give clues to their formation conditions.

2.2h: The rock cycle model shows how types of rock or rock material may be transformed from one type of rock to another.

Getting Ready

1. Photocopy worksheet.

2. Gather textbooks, tradebooks or arrange for access to the Internet or CD-ROM encyclopedias if you plan to use this activity as a study guide, homework or research project as well as to support students' research investigations.

Lesson Procedure

1. Test-taking strategy: Point out that many tests contain diagrams and data tables. Explain to students that they should read the title and look at the labels in order to decide what the graphic is all about before they use it. Once they know the main idea or purpose of the diagram or data table, it is easier to complete the task correctly.

2. Distribute the *Rocks and Minerals Worksheet*. Thinking aloud, model how you would figure out the purpose of the "Unknown Minerals Data Table" before using it to answer the questions.

3. Direct students to complete the worksheet independently, with another student, or in a small study group.

4. Review any questions with which students had difficulty. You may want to do the "research" questions as a whole class

Rocks, Rocks, Rocks

Objective Test-Prep: Rocks and Minerals Worksheet

Name_____Date_____

Rock Information

- Rocks are formed and changed in an endless cycle. Rocks break down, wear away, get compressed, melt or cool to form new rocks.
- Minerals are the building blocks of rocks and rocks are made up of different minerals. Rocks may also contain organic matter such as parts of seashells, remains of trees, plants and even animals.
- Rocks are categorized or grouped by how they are formed. There are three types of rocks: sedimentary, igneous, and metamorphic.

Study the diagram. Then use it to help you find the phrase that best completes each sentence. Circle the letter by that phrase.

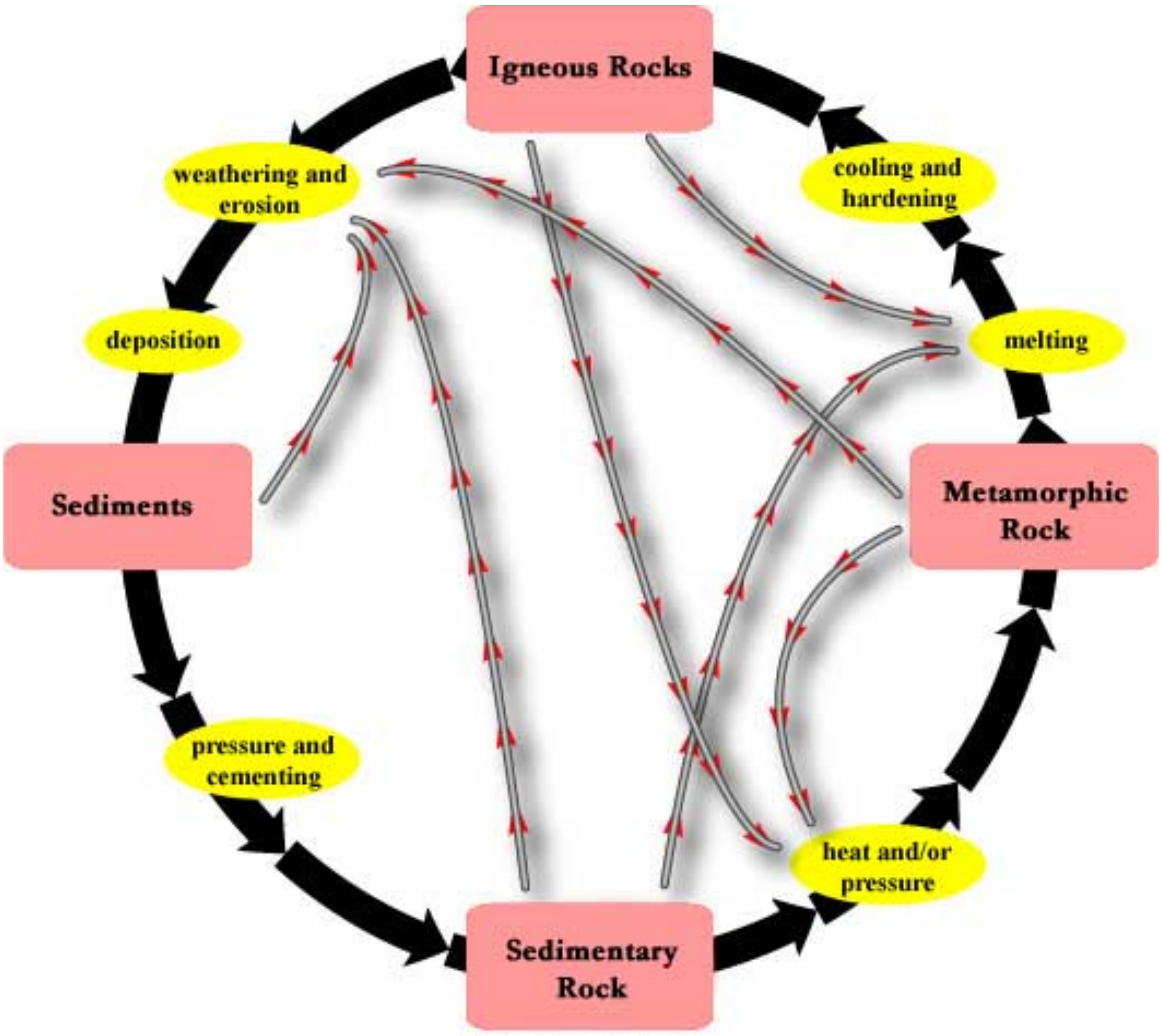

The Rock Cycle

1. Sedimentary rocks are formed by:

a. burial and cementing b. melting and solidification
c. heat and pressure d. weathering and erosion

2. Igneous rocks are formed by:

a. burial and cementing b. melting and solidification
c. deposits and sediment d. weathering

3. Metamorphic rocks are formed by:

a. pressure and/or heat b. burial and cementing
c. deposits and sediment d. weathering and erosion

4. Rocks are made up of different combinations of
_____?

Use the table to complete items 6 and 7.

Unknown Minerals			
Mineral	Color	Hardness	Other Properties
Sample A	white	1.0	powdery
Sample B	yellow	6.0	shiny
Sample C	clear	10.0	8-sided crystals
Sample D	gray/black	5.0	magnetic
Sample E	gray/black	5.0	12-sided crystals

5. List the minerals in order of hardness, beginning with the hardest.
_____
_____
_____

6. If samples D and E were broken up and mixed together, how could you separate them?
_____
_____
_____

Research Questions:
Use reference books in your classroom or library, or information from the Internet to research the answers to these questions.

7. Based on your knowledge of minerals, what can you infer from the information in the Unknown Minerals table? Circle the letter by the correct answer.

a. Sample D and E are the same mineral

b. Sample A is talc

c. Sample B is amethyst

d. Sample C is glass

8. Minerals are classified by their properties. Two of their properties are _____ and _____.

Test-taking Tip
When taking an objective or multiple-choice test, make sure you read all possible answers before choosing one.

Rocks, Rocks, Rocks

Math Connections

Overview

Students will design and build boxes in the shape of a rectangular prism in order to package a rock or other object. They will then create a net to show a flat representation of the solid figure. Students will find the surface area of their boxes in order to compute the cost of manufacturing them and explore arranging the nets to find how many boxes could be made from a single sheet of cardboard. Students will also determine how many of their boxes can fit into a larger carton.

Lesson 1 - Students will design and construct the smallest box possible in the shape of a rectangular prism to hold a rock or other object. They will explore creating a net (pattern) to represent a rectangular prism.

Lesson 2 - Students will find the surface area of the box they created in Lesson 1 in order to determine its cost. They will then explore how to place their net on a sheet of chart paper or oak tag to determine which arrangement would enable them to manufacture the highest number of packages from one sheet.

Lesson 3 - Students will explore volume and will determine how many of their rock boxes could fit into a shipping carton.

What's the Mathematics?

Students will:

- Understand the meaning of measurement units, square units and cubic units.
- Know and apply the formula for area of a rectangle and volume of a rectangular prism.
- Understand the concept of surface area of a rectangular prism.
- Construct a net to represent a rectangular prism.

Glossary

polyhedron - a 3-dimensional figure whose faces have 3 or more sides

area - the measure in square units, of the interior of a plane figure. The formula for area of a rectangle is Area = length x width or A = l x w.

surface area - the sum of the areas of the faces of a 3-dimensional figure

face - a flat surface on a solid figure

rectangular prism - a 6-sided polyhedron whose faces are all rectangles

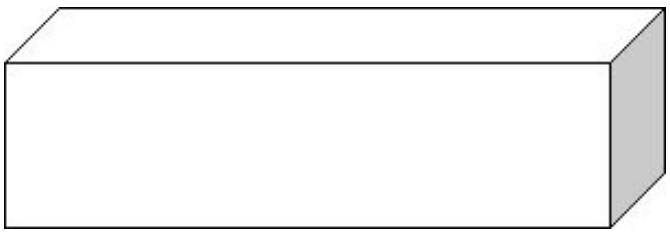

cube - a rectangular prism whose faces are all equal squares

net - a 2-dimensional diagram used to represent or construct a 3-dimensional shape (See below.)

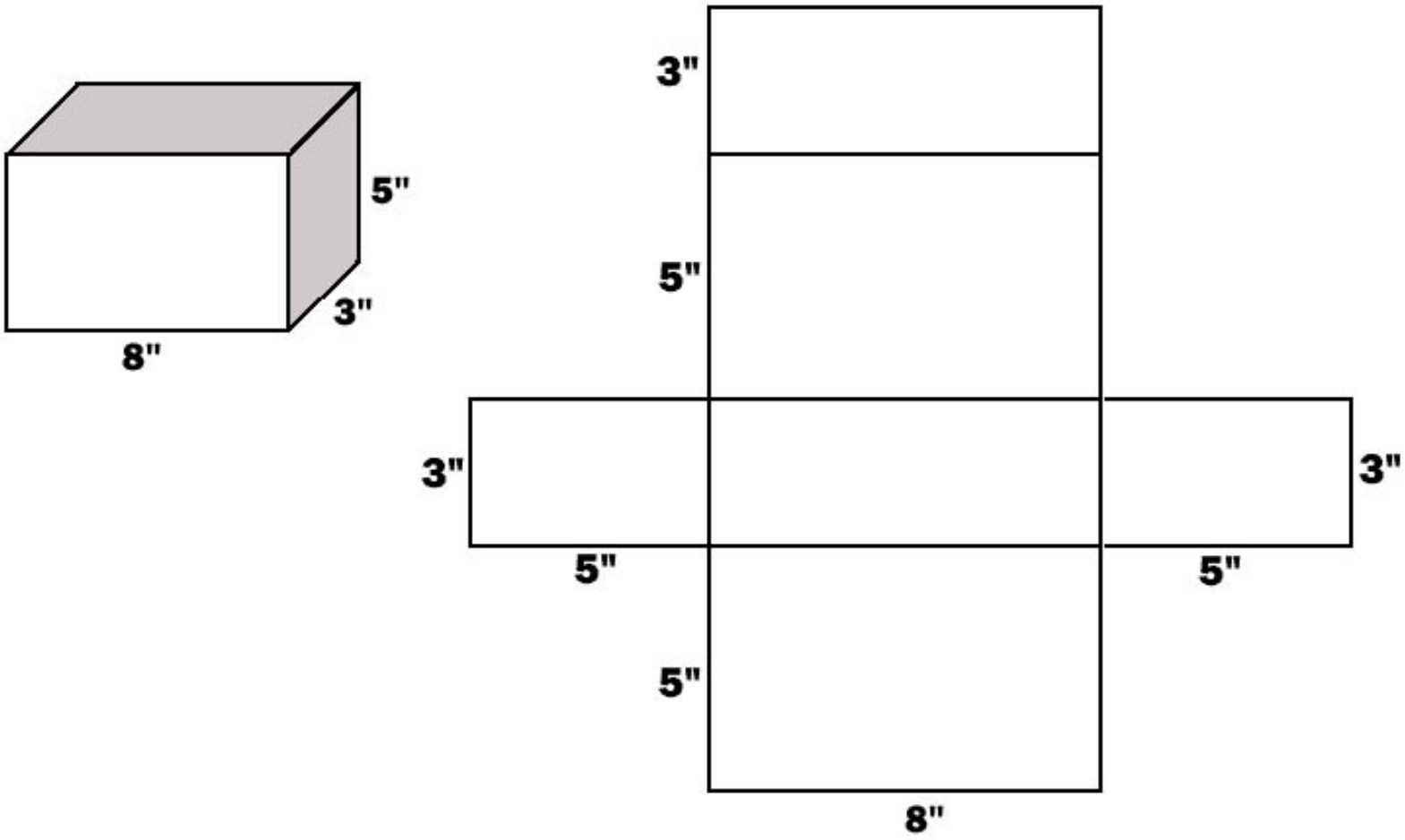

solid - a 3-dimensional figure

volume - the measure of the space inside a solid figure

Suggested Time

You should allow two 45-60 minute lessons for students to complete all of the activities. Keep in mind that timing may vary depending upon your students' needs, their interests and the extensions used.

Rocks, Rocks, Rocks

Math Connections - Lesson 1

Materials

For each group:

- Pencils
- Grid paper
- Oak tag or card stock
- Rocks, other small objects, or crumpled paper representing different sized rocks
- Rulers
- Boxes for each group (e.g., cereal boxes)
- Tape
- Scissors

Setting Up the Problem

Motivate the students to begin thinking about packaging. Bring in different shaped cartons such as a cereal box, shoebox, and a toothpaste box. Ask the students what they think manufacturers consider when they package a product. After they discuss their ideas in small groups, have them share with the entire class in order to generate a list of their ideas on chart paper. (Some of their answers may be: the weight of the paper, shape of the product, cost of materials, the audience the product is geared towards, and how fragile an item is.) If the students do not mention it, point out to them that it is cost effective to make the boxes as small as possible.

After discussing the above with the students, explain that their task will be to construct a box to package an object. Display a rectangular box and introduce the terms **face** (each flat surface on a solid figure), **rectangle**, and **rectangular prism** (a solid figure whose six faces are rectangles). Give the students boxes and scissors and allow them to cut open the boxes to see what a flat representation of the rectangular prism looks like.

Independent Work Time

You may wish to have students work individually, with a partner, or in groups of four. Distribute to each student or group a rock, a pencil, a ruler, tape, a sheet of grid paper and oak tag or card stock. Say to the class: "You are working for The Acme Packaging Company which designs packaging. Your group is given a rock and the following job: You must design and build the smallest box to hold the rock. You must also make a sketch of the box with measurements so that the factory can see how to reproduce it." You should be circulating among the students to facilitate and offer assistance. As you work with the groups, be sure that they are constructing the *smallest possible* box and assess their understanding of surface area and three-dimensional solids in order to plan future mini-lessons.

Note: Save and put students' names on the boxes that the students create to use in Lessons 2 and 3.

Share

Place the plans for the boxes in such a way that all students can see those of each group. Discuss the results. Some guiding questions to ask include: "Are all packages the same size? Why or why not? Can you share the process you used to construct your box? Did you draw your flat representation of the box before or after you built your box?"

The 2-dimensional representations could be in different forms. Some students might have drawn the 6 faces separately, others might have drawn 3 faces and said that there were 3 corresponding faces the same size, and some students might have drawn a net. Say: "A 3-dimensional figure that is opened flat to 2-dimensions is called a **net**."

Extension

Provide the students with various solid figures and have them draw the corresponding nets.

Rocks, Rocks, Rocks

Math Connections - Lesson 2

Materials

For each group:

- Pencils
- Grid Paper
- Rulers
- The box and net the students created in the last lesson
- A sheet of chart paper, newsprint, or large oak tag (approximately 80 cm by 60 cm)

Mini-Lesson

Tell the students that today's task will be to find the cost of the box that they created last time. The packaging costs $.02 per square centimeter. At this time, review with the class that the measure of the inside of a flat shape is called **area** and the formula for area of a rectangle is A = length x width or A = l x w. Remind the students that area is always measured in square units.

Independent Work Time

Distribute the materials listed above to each pair of students.

Say to the class: "Today you must find the cost of manufacturing your package if the cardboard costs $.02 a square centimeter. You must then find a way to fit the greatest number of boxes onto one sheet of cardboard. Draw a representation of this on the large sheet of paper."

It is necessary at this point for you to circulate in order to give students assistance. Be sure that the students are measuring their boxes in centimeters for this activity.

Share

Discuss with the students how they found the cost of producing the box. Make sure that they measured their boxes in *centimeters*, found the total of the areas of the six faces, and then multiplied that number by .02. Discuss the different strategies students used to be sure to count each face exactly once. Some students may have numbered the faces; some may have found the areas of 3 faces and then doubled their answer for the corresponding faces. Tell the students that the total area of all faces of a solid figure is called **surface area**.

Have students share their strategies for determining how many boxes could be made from one sheet of cardboard. Some students may have found the area of the large piece and divided it by the surface area of their box. Discuss with the class why this would work as an estimating tool, but would not give an accurate answer. Because of the configuration of the box, even though the cardboard might be large enough in area, you may not have enough room to lay out whole boxes.

Extension

Have students find the cost of 100 of their boxes if packaging costs $.80 a square meter. Remind students that there are 10,000 square centimeters in a square meter, so they must divide their surface area by 10,000 and then multiply that answer by .80. This is a good time to review with students that you can easily divide by powers of 10 by just moving the decimal point.

Rocks, Rocks, Rocks

Math Connections - Lesson 3

Materials

For each group:

- Pencils
- Rulers
- Boxes created in Lesson 1
- Cartons (the same size for each group)

Setting Up the Problem

Say to the students: "Today you are going to determine how many of the rock boxes you created could fit into the standard size shipping carton I have provided you with." Estimate first and then begin. Write an explanation of how you determined the answer.

Independent Work Time

Have pairs of students work to find how many of their small rock boxes could fit into the large carton.

Note: As you circulate among the students, suggest students that they might rotate the boxes differently in order to fit more of them into the carton.
Example:

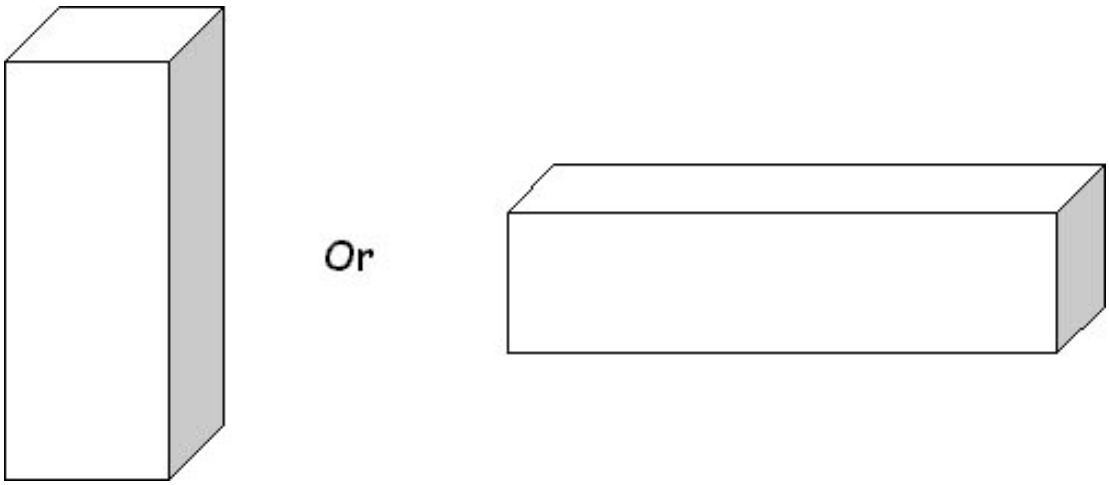

Share

Have groups discuss with the class the different ways of approaching the problem. One strategy is to find the volumes of the carton and the small box and divide. Other students might see how many of each small box would fit along the length, width, and height and calculate the answer that way. If the students have not used the term *volume*, explain: "The measure of the space inside a solid figure is called **volume**. To find the volume of a rectangular prism we multiply the length, width, and height. The

formula for the volume of a rectangular prism is $V = l \times w \times h$."

Ask the students why dividing the volumes does not give the most accurate answer. (When you actually place the small boxes into the larger carton, there will usually be space left over.) Make sure that students realize that in order to fit the largest number of boxes into the carton, the boxes do not have to all be placed in the same direction.

Assessments

1. For the rectangular prism below, draw a net and find its surface area.

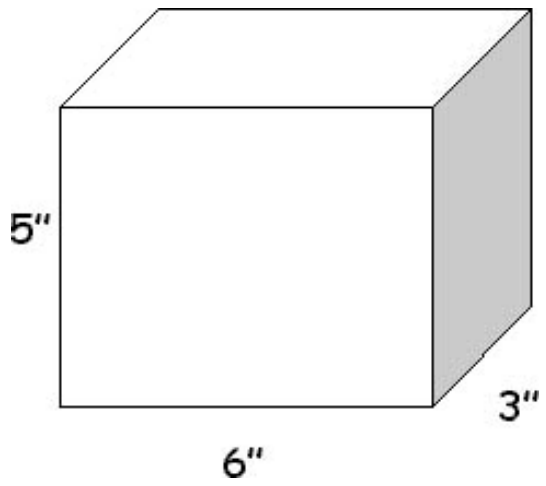

2. If the length, width, and height of a box are 8 cm, 5 cm, and 3 cm respectively, draw a picture of the figure and find the surface area and volume of the box.

Rocks, Rocks, Rocks

Technology Connections

Websites

Smithsonian in Your Classroom, Minerals, Crystals, and Gems: Stepping-Stones to Inquiry.
The goal of this issue is in part to introduce students to the basics of mineral science, and also to teach the scientific process by instructing students how to observe, form hypotheses, and draw conclusions. Includes lesson plans and list of resources.
http://educate.si.edu/resources/lessons/siyc/gems/start.html

A Gem of a Story Online, National Museum of Natural History.
An electronic field trip of the Janet Annenberg Hooker Hall of Geology, Gems, and Minerals. Lots of information, lesson plans, virtual tours of the exhibits and opportunities to speak with experts. There is a minimal fee per school.
http://www.bsu.edu/teachers/academy/gems

Department of Mineral Sciences, National Museum of Natural History.
This site is dedicated to the study of the origin and evolution of minerals, gems, rocks, volcanoes, and meteorites. The photo galleries contain great images that can be shared in a whole group activity using projection hardware.
http://nmnhwww.si.edu/minsci/index.htm

Franklin Institute
This fun site helps increase students' rock knowledge by combining descriptions of the different rock types with animation showing how they are formed. This site also provides several activities and literature connections to further develop rock knowledge.
http://www.fi.edu/fellows/fellow1/oct98/index2.html

Think Quest Jr.
This site is dedicated to all the "junior rockhounds." Your students can learn more about the rock cycle, common minerals and rockhounding tools with fun facts and activities.
http://library.thinkquest.org/J002289/index.html

Rocks, Rocks, Rocks

Acknowledgements

Science/Math/Technology Weekends Website is a project of the Office of the Deputy Chancellor for Instruction, Judith A. Rizzo, Ed.D., and was produced under the auspices of William P. Casey, Chief Executive for Program Development and Dissemination; and Peter P. Heaney, Jr., Executive Director, Division of Instructional Support.

Nick Coletto, Executive Director of Math, Science, and Technology, Division of Instructional Support; Linda Curtis-Bey, Assistant Director of Math, Science and Technology, Division of Instructional Support; and Lou Ranucci, Administrator for Science, Division of Instructional Support, provided ongoing leadership and support.

Barbara Taragan, Science Specialist, Division of Instructional Support, and Johanna Jaggers, Mathematics Specialist, Divison of Instructional Support, were project editors.

Lisa Simon, Ph.D. was the project copy editor. Arlene Francis, Technology Specialist, Division of Instructional Support; Joyce Chung, Assistant Principal Mathematics, Mark Twain Intermediate School, District 21; and Edgar Lin, Teacher, MS 823, District 15; developed the Technology and Mathematical Links. Lenore DiLeo Berner, Science Staff Developer, District 15, created the Test-Prep Links.

Jason Dispinziere was responsible for web design. Eric Caban assisted in web design. Pam Pollock, Office of Instructional Publications, developed web page layouts and illustrations for this activity.

Ed Deneke and Cliff Fee, science staff developers of the Queens Multidisciplinary Resource Center, Division of Instructional Support, New York City Board of Education wrote and developed this activity. Stella Theodarakis, District Science Coordinator, District 15, edited this project.

Rocks, Rocks, Rocks is based on an activity created by D. L. Birdd, Buffalo State College (now S.U.N.Y. Buffalo), Buffalo, NY.